Work Order ID 51383

August 20, 2009 3:20:29 PM

Item ID: D135-751-011 **Accept** **Setup Start**

Revision ID: C **Stop**

Item Name: Skidtube Installation

Start Date: 08/24/2009 **Start Qty:** 1.00 **Cust Item ID:**

Required Date: 09/07/2009 **Req'd Qty:** 1.00 **Customer:**

Reference:

Run Start

Approvals: **Process Plan:** MF **Date:** 09-08-20 **Tooling:** **Date:**

Stop

QC: **Date:** **SPC (Y/N):** **Date:**

Sequence ID/ Work Center ID	Operation Description	Set Up/ Run Hours	Draw Number	Draw Rev.	Plan Code	Accept Qty	Reject Qty	Reject Number	Insp. Stamp
Draw Nbr	**Revision Nbr**								
D3507	Rev C								
100		0.00							
DC	DOCUMENT CONTROL								
Document Control	**Memo**	0.00							
	Photocopy bluefile & type labels per PPP D135-751-011		CHG001						
110		0.00							
Skidtubes	Skidtubes								
Skidtubes	**Memo**	0.00							

1-Determine square end of tube and deburr

2-Drill #30 pilot holes using DT8678. Do not open holes.

3- Deburr holes.

51383

Dart Aerospace Ltd

W/O:		WORK ORDER CHANGES					
DATE	STEP	PROCEDURE CHANGE	By	Date	Qty	Approval Chief Eng / Prod Mgr	Approval QC Inspector

Part No: _____ **PAR #:** _____ **Fault Category:** _____ **NCR:** Yes No **DQA:** _____ **Date:** _____

Resolution: _____ **Disposition:** _____ **QA: N/C Closed:** _____ **Date:** _____

NCR:		WORK ORDER NON-CONFORMANCE (NCR)						
DATE	STEP	Description of NC Section A	Corrective Action Section B			Verification Section C	Approval Chief Eng	Approval QC Inspector
			Initial Chief Eng	Action Description Chief Eng	Sign & Date			

NOTE: Date & initial all entries

H:\fFORMS\Quality Assurance\approved QA\NCRWO RevE

Work Order ID 51383

August 20, 2009 3:20:29 PM

Item ID: D135-751-011
Revision ID: C
Item Name: Skidtube Installation

Accept

Setup Start
Stop

Start Date: 08/24/2009 **Start Qty:** 1.00
Required Date: 09/07/2009 **Req'd Qty:** 1.00
Reference:

Cust Item ID:
Customer:

Run Start
Stop

Approvals: **Process Plan:** _____ **Date:** _____ **Tooling:** _____ **Date:** _____
QC: _____ **Date:** _____ **SPC (Y/N):** _____ **Date:** _____

Sequence ID/ Work Center ID	Operation Description	Set Up/ Run Hours	Draw Number	Draw Rev.	Plan Code	Accept Qty	Reject Qty	Reject Number	Insp. Stamp
120		0.00							
CNC Bend 1	BENDING MACHINE - SKIDTUBES					D		4 9/8/26	
CNC Delta 100 Bender	**Memo**	0.00							
	Bend tube as per program on CNC Bender and Dwg D3507. Use 5/16" locator pin on buggy "A".								

Pto →

Dart Aerospace Ltd

W/O:		WORK ORDER CHANGES					
DATE	STEP	PROCEDURE CHANGE	By	Date	Qty	Approval Chief Eng / Prod Mgr	Approval QC Inspector

Part No: D135-751-011 PAR #: _____ Fault Category: Prod-skidtubes NCR: (Yes) No DQA: _____ Date: 05.10.05

Resolution: Scrap Disposition: Scrap QA: N/C Closed: _____ Date: 05.10.05

NCR: 51383		WORK ORDER NON-CONFORMANCE (NCR)						
DATE	STEP	Description of NC Section A	Corrective Action Section B: Initial Chief Eng	Action Description Chief Eng	Sign & Date	Verification Section C	Approval Chief Eng	Approval QC Inspector
9/9/2	# 120	Qty x3 skid tube extrusions were under bent and had the wrong Radius. R.C Process + Bend Development & Possible machine malfunctions	05/10/02	Scrap Qty x3 skid tubes that do not correspond to Dwg. replace B# 28622	9-8-25	09/09/14	05/10/02	09/09/02

NOTE: Date & initial all entries

H:\FORMS\Quality Assurance\approved QA\NCRWO RevE

Work Order ID 51383

August 20, 2009 3:20:29 PM

Item ID: D135-751-011
Revision ID: C
Item Name: Skidtube Installation

Accept

Setup Start
Stop

Start Date: 08/24/2009 **Start Qty:** 1.00
Required Date: 09/07/2009 **Req'd Qty:** 1.00
Reference:

Cust Item ID:
Customer:

Run Start
Stop

Approvals: **Process Plan:** _____ **Date:** _____ **Tooling:** _____ **Date:** _____
QC: _____ **Date:** _____ **SPC (Y/N):** _____ **Date:** _____

Sequence ID/ Work Center ID	Operation Description	Set Up/ Run Hours	Draw Number	Draw Rev.	Plan Code	Accept Qty	Reject Qty	Reject Number	Insp. Stamp
130	Skidtubes	0.00							
Skidtubes		0.00							
Skidtubes									

Memo

1-Cut Fwd end of the tube using DT8185

2-Cut Aft end at VC using DT8185

3-Deburr ends

4-Drill Aft & Fwd Cap holes using DT8678 & DT8901

5-Locate DT8870 & Drill Ground wire hole on top of Tube.

6-Locate DT8870 with 3/16cleco in Ground wire hole ,then Pilot Drill all X-Bolt holes using 3/16" drill.****DO NOT OPEN AFT CAP HOLES*****

7-Drill pilot holes for wearplates ~~using~~ Dt8868,Use DT8892 FOR REAR WEARPLATE HOLES.

8-Open six rear wearplate holes using DT8892., Open holes Ø297

9-~~Open holes section C-C to .375" and locate DT9431 using "T" pin & cleco.~~

10- Drill holes ~~section G-G (DT9431~~)

11-Open Aft & Fwd Cap holes using .208" drill.

12-Bore out aft end of tube as per Dwg D3507 & Detail "B".

13-Open ground wire hole .297" section E-E

Section CC & GG Holes must be laid out Manually open to #30

DD 9-8-27

Dart Aerospace Ltd

W/O:		WORK ORDER CHANGES					
DATE	STEP	PROCEDURE CHANGE	By	Date	Qty	Approval Chief Eng / Prod Mgr	Approval QC Inspector

Part No: _____ **PAR #:** _____ **Fault Category:** _____ **NCR:** Yes No **DQA:** _____ **Date:** _____

Resolution: _____ **Disposition:** _____ **QA: N/C Closed:** _____ **Date:** _____

NCR:		WORK ORDER NON-CONFORMANCE (NCR)						
DATE	STEP	Description of NC Section A	Corrective Action Section B			Verification Section C	Approval Chief Eng	Approval QC Inspector
			Initial Chief Eng	Action Description Chief Eng	Sign & Date			

NOTE: Date & initial all entries

H:\fFORMS\Quality Assurance\approved QA\NCRWO RevE

Work Order ID 51383

August 20, 2009 3:20:29 PM

Item ID: D135-751-011
Revision ID: C
Item Name: Skidtube Installation

Accept

Setup **Start**
Stop

Start Date: 08/24/2009 **Start Qty:** 1.00
Required Date: 09/07/2009 **Req'd Qty:** 1.00
Reference:

Cust Item ID:
Customer:

Run **Start**
Stop

Approvals: **Process Plan:** _____ **Date:** _____ **Tooling:** _____ **Date:** _____
QC: _____ **Date:** _____ **SPC (Y/N):** _____ **Date:** _____

Sequence ID/ Work Center ID	Operation Description	Set Up/ Run Hours	Draw Number	Draw Rev.	Plan Code	Accept Qty	Reject Qty	Reject Number	Insp. Stamp
	14-Deburr holes.								
140 QC Quality Control	QC5- Inspect part completeness to step on W/O	0.00	=> 5/01/08/27						
	Memo	0.00							
150 HandFinish Hand Finishing	Chemical Conversion Coat per QSI005 4.1	0.00	DP 9-8-27						
	Memo	0.00							

Dart Aerospace Ltd

W/O:		WORK ORDER CHANGES					
DATE	STEP	PROCEDURE CHANGE	By	Date	Qty	Approval Chief Eng / Prod Mgr	Approval QC Inspector

Part No: _____ **PAR #:** _____ **Fault Category:** _____ **NCR:** Yes No **DQA:** _____ **Date:** _____

Resolution: _____ **Disposition:** _____ **QA: N/C Closed:** _____ **Date:** _____

NCR:		WORK ORDER NON-CONFORMANCE (NCR)						
DATE	STEP	Description of NC Section A	Corrective Action Section B			Verification Section C	Approval Chief Eng	Approval QC Inspector
			Initial Chief Eng	Action Description Chief Eng	Sign & Date			

NOTE: Date & initial all entries

H:\fFORMS\Quality Assurance\approved QA\NCRWO RevE

Work Order ID 51383

August 20, 2009 3:20:29 PM

Item ID: D135-751-011 **Accept** **Setup Start**

Revision ID: C **Stop**

Item Name: Skidtube Installation

Start Date: 08/24/2009 **Start Qty:** 1.00 **Cust Item ID:**

Required Date: 09/07/2009 **Req'd Qty:** 1.00 **Customer:**

Reference:

Run Start

Approvals: **Process Plan:** **Date:** **Tooling:** **Date:**

Stop

QC: **Date:** **SPC (Y/N):** **Date:**

Sequence ID/ Work Center ID	Operation Description	Set Up/ Run Hours	Draw Number	Draw Rev.	Plan Code	Accept Qty	Reject Qty	Reject Number	Insp. Stamp
160	QC3- Inspect Part Finish	0.00							
QC Quality Control	**Memo**	0.00							

A.M. 09-08-27 (1)

Dart Aerospace Ltd

W/O:		WORK ORDER CHANGES					
DATE	STEP	PROCEDURE CHANGE	By	Date	Qty	Approval Chief Eng / Prod Mgr	Approval QC Inspector

Part No: _____ **PAR #:** _____ **Fault Category:** _____ **NCR:** Yes No **DQA:** _____ **Date:** _____

Resolution: _____ **Disposition:** _____ **QA: N/C Closed:** _____ **Date:** _____

NCR:		WORK ORDER NON-CONFORMANCE (NCR)						
DATE	STEP	Description of NC Section A	Corrective Action Section B			Verification Section C	Approval Chief Eng	Approval QC Inspector
			Initial Chief Eng	Action Description Chief Eng	Sign & Date			

NOTE: Date & initial all entries

H:\fFORMS\Quality Assurance\approved QA\NCRWO RevE

Work Order ID 51383

August 20, 2009 3:20:29 PM

Item ID: D135-751-011
Revision ID: C
Item Name: Skidtube Installation

Accept

Setup **Start**
Stop

Start Date: 08/24/2009 **Start Qty:** 1.00
Required Date: 09/07/2009 **Req'd Qty:** 1.00
Reference:

Cust Item ID:
Customer:

Run **Start**
Stop

Approvals: **Process Plan:** _____ **Date:** _____ **Tooling:** _____ **Date:** _____
QC: _____ **Date:** _____ **SPC (Y/N):** _____ **Date:** _____

Sequence ID/ Work Center ID	Operation Description	Set Up/ Run Hours	Draw Number	Draw Rev.	Plan Code	Accept Qty	Reject Qty	Reject Number	Insp. Stamp
170	Skidtubes	0.00							
Skidtubes		0.00							
Skidtubes									

Memo

1-Open X-Bolt holes to .375"(2Places) & .500"(2Places) as per Dwg D3507. and Detail "F"

2-Counter Sink X-BOLT holes as per Dwg D3507

3-Deburr and blow out chips from inside of tube.

DP 9-8-28

4-Bond web as per Dwg D3507 & QSI 015
A/R 241 Sike Flex Batch: M112391
Exp Date: ~~02/2010~~ 2010/02 MB 09-08-31

5-Weld x-bolt (D3504-1/-3)spacers as per Dwg D3507 and Detail C-C & D-D.
A/R AL ROD Batch: M111682 BE 09-09-02

6-Grind welds flush

7-Drill Rivet Holes as per Dwg D3507 Using Dt8871A&B

8-Deburr Rivet holes.

BE 09/09/14

Dart Aerospace Ltd

W/O:		WORK ORDER CHANGES					
DATE	STEP	PROCEDURE CHANGE	By	Date	Qty	Approval Chief Eng / Prod Mgr	Approval QC Inspector

Part No: _____ **PAR #:** _____ **Fault Category:** _____ **NCR:** Yes No **DQA:** _____ **Date:** _____

Resolution: _____ **Disposition:** _____ **QA: N/C Closed:** _____ **Date:** _____

NCR:		WORK ORDER NON-CONFORMANCE (NCR)						
DATE	STEP	Description of NC Section A	Corrective Action Section B			Verification Section C	Approval Chief Eng	Approval QC Inspector
			Initial Chief Eng	Action Description Chief Eng	Sign & Date			

NOTE: Date & initial all entries

H:\FORMS\Quality Assurance\approved QA\NCRWO RevE

Work Order ID 51383

August 20, 2009 3:20:29 PM

Item ID: D135-751-011
Revision ID: C
Item Name: Skidtube Installation

Accept

Setup Start
Stop

Start Date: 08/24/2009 **Start Qty:** 1.00
Required Date: 09/07/2009 **Req'd Qty:** 1.00
Reference:

Cust Item ID:
Customer:

Run Start
Stop

Approvals: **Process Plan:** _____ **Date:** _____ **Tooling:** _____ **Date:** _____
QC: _____ **Date:** _____ **SPC (Y/N):** _____ **Date:** _____

Sequence ID/ Work Center ID	Operation Description	Set Up/ Run Hours	Draw Number	Draw Rev.	Plan Code	Accept Qty	Reject Qty	Reject Number	Insp. Stamp
180 QC Quality Control	QC10- Inspect visual per QSI004- ground welds **Memo**	0.00 0.00				1	ϕ		
190 Skidtubes Skidtubes	Skidtubes **Memo** 1-Rivet D3506-1/-3 as per Dwg D3507.	0.00 0.00				1	0	BE 09/09/14	
200 QC Quality Control	QC5- Inspect part completeness to step on W/O **Memo**	0.00 0.00				1	ϕ		

Dart Aerospace Ltd

W/O:		WORK ORDER CHANGES					
DATE	STEP	PROCEDURE CHANGE	By	Date	Qty	Approval Chief Eng / Prod Mgr	Approval QC Inspector

Part No: _____ **PAR #:** _____ **Fault Category:** _____ **NCR:** Yes No **DQA:** _____ **Date:** _____

Resolution: _____ **Disposition:** _____ **QA: N/C Closed:** _____ **Date:** _____

NCR:		WORK ORDER NON-CONFORMANCE (NCR)						
DATE	STEP	Description of NC Section A	Corrective Action Section B			Verification Section C	Approval Chief Eng	Approval QC Inspector
			Initial Chief Eng	Action Description Chief Eng	Sign & Date			

NOTE: Date & initial all entries

H:\fFORMS\Quality Assurance\approved QA\NCRWO RevE

Work Order ID 51383

August 20, 2009 3:20:29 PM

Item ID: D135-751-011 **Accept** **Setup Start** **Stop**

Revision ID: C

Item Name: Skidtube Installation

Start Date: 08/24/2009 **Start Qty:** 1.00 **Cust Item ID:**

Required Date: 09/07/2009 **Req'd Qty:** 1.00 **Customer:**

Reference:

Run Start **Stop**

Approvals: **Process Plan:** _____ **Date:** _____ **Tooling:** _____ **Date:** _____

QC: _____ **Date:** _____ **SPC (Y/N):** _____ **Date:** _____

Sequence ID/ Work Center ID	Operation Description	Set Up/ Run Hours	Draw Number	Draw Rev.	Plan Code	Accept Qty	Reject Qty	Reject Number	Insp. Stamp
210 HandFinish Hand Finishing	Pressure Wash per QSI005 4.3	0.00							
	Memo	0.00	M-L	08/08/21		12			
220 Powdercoat Powder Coating	White Gloss(Ref:4.3.5.1) per QSI005 4.3-Alum	0.00							
	Memo START TIME: 1:50 OVEN TEMPERATURE: 320 FINISH TIME: 2:20	0.00	M112260 M-L	08/09/21		12			
230 QC Quality Control	QC3- Inspect Part Finish	0.00	BL	08-09-22		1			
	Memo	0.00							

Dart Aerospace Ltd

W/O:		WORK ORDER CHANGES					
DATE	STEP	PROCEDURE CHANGE	By	Date	Qty	Approval Chief Eng / Prod Mgr	Approval QC Inspector

Part No: _____ PAR #: _____ Fault Category: _____ NCR: Yes No DQA: _____ Date: _____

Resolution: _____ Disposition: _____ QA: N/C Closed: _____ Date: _____

NCR:		WORK ORDER NON-CONFORMANCE (NCR)						
DATE	STEP	Description of NC Section A	Corrective Action Section B			Verification Section C	Approval Chief Eng	Approval QC Inspector
			Initial Chief Eng	Action Description Chief Eng	Sign & Date			

NOTE: Date & initial all entries

H:\fFORMS\Quality Assurance\approved QA\NCRWO RevE

Work Order ID 51383

August 20, 2009 3:20:29 PM

Item ID: D135-751-011
Revision ID: C
Item Name: Skidtube Installation

Accept

Setup Start
Stop

Start Date: 08/24/2009 **Start Qty:** 1.00
Required Date: 09/07/2009 **Req'd Qty:** 1.00
Reference:

Cust Item ID:
Customer:

Run Start
Stop

Approvals: **Process Plan:** _____ **Date:** _____ **Tooling:** _____ **Date:** _____
QC: _____ **Date:** _____ **SPC (Y/N):** _____ **Date:** _____

Sequence ID/ Work Center ID	Operation Description	Set Up/ Run Hours	Draw Number	Draw Rev.	Plan Code	Accept Qty	Reject Qty	Reject Number	Insp. Stamp
240	HandFinishing	0.00							
HandFinish	**Memo**	0.00							
Hand Finishing	Install Wearplate &Ground Wire inserts as per Dwg D3507.		BR 09-09-23			①			
250	QC5- Inspect part completeness to step on W/O	0.00							
QC	**Memo**	0.00							
Quality Control	Inspect Inserts								

2) 8 09/09/23

Dart Aerospace Ltd

W/O:		WORK ORDER CHANGES					
DATE	STEP	PROCEDURE CHANGE	By	Date	Qty	Approval Chief Eng / Prod Mgr	Approval QC Inspector

Part No: _____ **PAR #:** _____ **Fault Category:** _____ **NCR:** Yes No **DQA:** _____ **Date:** _____

Resolution: _____ **Disposition:** _____ **QA: N/C Closed:** _____ **Date:** _____

NCR:		WORK ORDER NON-CONFORMANCE (NCR)						
DATE	STEP	Description of NC Section A	Corrective Action Section B			Verification Section C	Approval Chief Eng	Approval QC Inspector
			Initial Chief Eng	Action Description Chief Eng	Sign & Date			

NOTE: Date & initial all entries

H:\fFORMS\Quality Assurance\approved QA\NCRWO RevE

Work Order ID 51383

August 20, 2009 3:20:29 PM

Item ID: D135-751-011
Revision ID: C
Item Name: Skidtube Installation

Accept

Setup Start
Stop

Start Date: 08/24/2009 **Start Qty:** 1.00
Required Date: 09/07/2009 **Req'd Qty:** 1.00
Reference:

Cust Item ID:
Customer:

Run Start
Stop

Approvals: **Process Plan:** _____ **Date:** _____ **Tooling:** _____ **Date:** _____
QC: _____ **Date:** _____ **SPC (Y/N):** _____ **Date:** _____

Sequence ID/ Work Center ID	Operation Description	Set Up/ Run Hours	Draw Number	Draw Rev.	Plan Code	Accept Qty	Reject Qty	Reject Number	Insp. Stamp
260	HandFinishing	0.00							
HandFinish	**Memo**	0.00							
Hand Finishing	1-Inspect for Foreign objects								
	2-Install Fwd & Aft caps as per Dwg D3507 And Detail "A" & "B" A/R 241 Sika Flex Batch: M 112391 Exp Date: 10/20								
	3-Install Wearplates as per Dwg D3507 , Note:Install (1) Bolt and (1) washer on Ground Wire insert on top of tube Do not Install Scews where indicated on Dwg(Note #6) A/R 241 Sika Flex Batch: M 112391 Exp Date: 10/20								
	4-Install Plug assemblys as per Dwg D3507.								
	5- Wing Walk as per Dwg D3507 and QSI 005 4.4								
270	QC5- Inspect part completeness to step on W/O	0.00							
QC	**Memo**	0.00							
Quality Control									

BF 09-09-23 ①

27 S 09/08/23 ④

Dart Aerospace Ltd

W/O:		WORK ORDER CHANGES					
DATE	STEP	PROCEDURE CHANGE	By	Date	Qty	Approval Chief Eng / Prod Mgr	Approval QC Inspector

Part No: _____ **PAR #:** _____ **Fault Category:** _____ **NCR:** Yes No **DQA:** _____ **Date:** _____

Resolution: _____ **Disposition:** _____ **QA: N/C Closed:** _____ **Date:** _____

NCR:		WORK ORDER NON-CONFORMANCE (NCR)						
DATE	STEP	Description of NC Section A	Corrective Action Section B			Verification Section C	Approval Chief Eng	Approval QC Inspector
			Initial Chief Eng	Action Description Chief Eng	Sign & Date			

NOTE: Date & initial all entries

H:\fFORMS\Quality Assurance\approved QA\NCRWO RevE

Work Order ID 51383

August 20, 2009 3:20:29 PM

Item ID: D135-751-011 **Accept** **Setup Start**

Revision ID: C **Stop**

Item Name: Skidtube Installation

Start Date: 08/24/2009 **Start Qty:** 1.00 **Cust Item ID:**

Required Date: 09/07/2009 **Req'd Qty:** 1.00 **Customer:**

Reference:

Approvals: **Process Plan:** _____ **Date:** _____ **Tooling:** _____ **Date:** _____ **Run Start**

QC: _____ **Date:** _____ **SPC (Y/N):** _____ **Date:** _____ **Stop**

Sequence ID/ Work Center ID	Operation Description	Set Up/ Run Hours	Draw Number	Draw Rev.	Plan Code	Accept Qty	Reject Qty	Reject Number	Insp. Stamp
280	Pick Kit	0.00				9/9/25		(12)	
Packaging	**Memo**	0.00							
Packaging									
290	QC4- 100% Inspect kits for completeness	0.00							
QC	**Memo**	0.00				(12)	ø		
Quality Control									
300	Packaging	0.00				9/9/28		(12)	
Packaging	**Memo**	0.00							
Packaging									

Identify and pack for shipping as per PPP D135-751-011
Location: 80
PPP Rev: B

Dart Aerospace Ltd

W/O:		WORK ORDER CHANGES					
DATE	STEP	PROCEDURE CHANGE	By	Date	Qty	Approval Chief Eng / Prod Mgr	Approval QC Inspector

Part No: _____ **PAR #:** _____ **Fault Category:** _____ **NCR:** Yes No **DQA:** _____ **Date:** _____

Resolution: _____ **Disposition:** _____ **QA: N/C Closed:** _____ **Date:** _____

NCR:		WORK ORDER NON-CONFORMANCE (NCR)						
DATE	STEP	Description of NC Section A	Corrective Action Section B			Verification Section C	Approval Chief Eng	Approval QC Inspector
			Initial Chief Eng	Action Description Chief Eng	Sign & Date			

NOTE: Date & initial all entries

H:\fFORMS\Quality Assurance\approved QA\NCRWO RevE

Work Order ID 51383

August 20, 2009 3:20:29 PM

Item ID: D135-751-011 **Accept** **Setup Start**

Revision ID: C **Stop**

Item Name: Skidtube Installation

Start Date: 08/24/2009 **Start Qty:** 1.00 **Cust Item ID:**

Required Date: 09/07/2009 **Req'd Qty:** 1.00 **Customer:**

Reference:

Run Start

Approvals: **Process Plan:** _____ **Date:** _____ **Tooling:** _____ **Date:** _____

Stop

QC: _____ **Date:** _____ **SPC (Y/N):** _____ **Date:** _____

Sequence ID/ Work Center ID	Operation Description	Set Up/ Run Hours	Draw Number	Draw Rev.	Plan Code	Accept Qty	Reject Qty	Reject Number	Insp. Stamp
310	QC21- Final Inspection - Work Order Release	0.00							
QC Quality Control	**Memo**	0.00							

09/09/30

U 09-09-30

Dart Aerospace Ltd

W/O:		WORK ORDER CHANGES					
DATE	STEP	PROCEDURE CHANGE	By	Date	Qty	Approval Chief Eng / Prod Mgr	Approval QC Inspector

Part No: _____ **PAR #:** _____ **Fault Category:** _____ **NCR:** Yes No **DQA:** _____ **Date:** _____

Resolution: _____ **Disposition:** _____ **QA: N/C Closed:** _____ **Date:** _____

NCR:		WORK ORDER NON-CONFORMANCE (NCR)						
DATE	STEP	Description of NC Section A	Corrective Action Section B			Verification Section C	Approval Chief Eng	Approval QC Inspector
			Initial Chief Eng	Action Description Chief Eng	Sign & Date			

NOTE: Date & initial all entries

H:\fFORMS\Quality Assurance\approved QA\NCRWO RevE

Picklist Print

August 20, 2009 3:20:29 PM

Work Order ID: 51383

Parent Item: D135-751-011RevC

Parent Item Name: Skidtube Installation

Comments:

Start Date: 08/24/2009 **Required Date:** 09/07/2009

Start Qty: 1.00 **Required Qty:** 1.00

Component Item ID/ Item Name	Replacement Item ID	Mfg/ Purch	Bin Item	Primary Location	Last Location	Route Seq ID	Unit of Measure	Qty on Hand	Remaining Qty To Pick	Qty Issued	Date Issued	Status
D2962-150RevA		Manufactured	No			110	Each	43.0000	1.0000			
3.540 Outer Tube, Extrut												
				Warehouse Location		**Loc Qty**		**Loc Code**				
				Main Warehouse								
				ST		43						
					28672	43				1	K 9/8/26	
D3504-1RevC		Manufactured	No			170	Each	19.0000	2.0000			
Crossbolt Spacer												
				Warehouse Location		**Loc Qty**		**Loc Code**				
				Main Warehouse								
				ST		19						
					31234	19				2	BE 09-09-02	
D3504-3RevC		Manufactured	No			170	Each	18.0000	1.0000			
Crossbolt Spacer												
				Warehouse Location		**Loc Qty**		**Loc Code**				
				Main Warehouse								
				ST		18						
					31232	18				1	BE 09-09-02	

Dart Aerospace Ltd

W/O:		WORK ORDER CHANGES					
DATE	STEP	PROCEDURE CHANGE	By	Date	Qty	Approval Chief Eng / Prod Mgr	Approval QC Inspector

Part No: _____ **PAR #:** _____ **Fault Category:** _____ **NCR:** Yes No **DQA:** _____ **Date:** _____

Resolution: _____ **Disposition:** _____ **QA: N/C Closed:** _____ **Date:** _____

NCR:		WORK ORDER NON-CONFORMANCE (NCR)						
DATE	STEP	Description of NC Section A	Corrective Action Section B			Verification Section C	Approval Chief Eng	Approval QC Inspector
			Initial Chief Eng	Action Description Chief Eng	Sign & Date			

NOTE: Date & initial all entries

H:\fFORMS\Quality Assurance\approved QA\NCRWO RevE

Picklist Print

August 20, 2009 3:20:29 PM

Work Order ID: 51383

Parent Item: D135-751-011RevC

Parent Item Name: Skidtube Installation

Comments:

Start Date: 08/24/2009 **Required Date:** 09/07/2009

Start Qty: 1.00 **Required Qty:** 1.00

Component Item ID/ Item Name	Replacement Item ID	Mfg/ Purch	Bin Item	Primary Location	Last Location	Route Seq ID	Unit of Measure	Qty on Hand	Remaining Qty To Pick	Qty Issued	Date Issued	Status
D3504-5RevC Crossbolt Spacer		Manufactured	No			170	Each	14.0000	2.0000			
				Warehouse Location		**Loc Qty**		**Loc Code**				
				Main Warehouse								
				ST		14						
					36181	14				2	BE 9-9-2	
D3505-1RevA Web		Manufactured	No			170	Each	0.0000	1.0000	B-51708	MB 09-08-31	
D3506-3RevA Doubler		Manufactured	No			170	Each	16.0000	2.0000			
				Warehouse Location		**Loc Qty**		**Loc Code**				
				Main Warehouse								
				LG		16						
					50563	16				2	BE 9-9-2	

Dart Aerospace Ltd

W/O:		WORK ORDER CHANGES					
DATE	STEP	PROCEDURE CHANGE	By	Date	Qty	Approval Chief Eng / Prod Mgr	Approval QC Inspector

Part No: _____ **PAR #:** _____ **Fault Category:** _____ **NCR:** Yes No **DQA:** _____ **Date:** _____

Resolution: _____ **Disposition:** _____ **QA: N/C Closed:** _____ **Date:** _____

NCR:		WORK ORDER NON-CONFORMANCE (NCR)						
DATE	STEP	Description of NC Section A	Corrective Action Section B			Verification Section C	Approval Chief Eng	Approval QC Inspector
			Initial Chief Eng	Action Description Chief Eng	Sign & Date			

NOTE: Date & initial all entries

H:\FORMS\Quality Assurance\approved QA\NCRWO RevE

Picklist Print

August 20, 2009 3:20:29 PM

Work Order ID: 51383

Parent Item: D135-751-011RevC

Parent Item Name: Skidtube Installation

Comments:

Start Date: 08/24/2009 **Required Date:** 09/07/2009

Start Qty: 1.00 **Required Qty:** 1.00

Component Item ID/ Item Name	Replacement Item ID	Mfg/ Purch	Bin Item	Primary Location	Last Location	Route Seq ID	Unit of Measure	Qty on Hand	Remaining Qty To Pick	Qty Issued	Date Issued	Status
ALS7-1032-130		Purchased	No			240	Each	3,628.000	38.0000			
Insert												

Warehouse Location	Loc Qty	Loc Code
Main Warehouse		
ST	3628	
105855	16	
108606	52	
111529	1560	
111779	2000	

X38 MD 09/09/02

MS20601-AD4W3		Purchased	No			240	Each	282.0000	12.0000			
Rivet												

Warehouse Location	Loc Qty	Loc Code
Main Warehouse		
ST	282	
107823	3	
111359	279	

~~4~~ 3 BE 9/9/2 BE 9/9/14

Dart Aerospace Ltd

W/O:		WORK ORDER CHANGES					
DATE	STEP	PROCEDURE CHANGE	By	Date	Qty	Approval Chief Eng / Prod Mgr	Approval QC Inspector

Part No: _____ PAR #: _____ Fault Category: _____ NCR: Yes No DQA: _____ Date: _____

Resolution: _____ Disposition: _____ QA: N/C Closed: _____ Date: _____

NCR:		WORK ORDER NON-CONFORMANCE (NCR)						
DATE	STEP	Description of NC Section A	Corrective Action Section B			Verification Section C	Approval Chief Eng	Approval QC Inspector
			Initial Chief Eng	Action Description Chief Eng	Sign & Date			

NOTE: Date & initial all entries

H:\fFORMS\Quality Assurance\approved QA\NCRWO RevE

Picklist Print

August 20, 2009 3:20:29 PM

Work Order ID: 51383

Parent Item: D135-751-011RevC

Parent Item Name: Skidtube Installation

Comments:

Start Date: 08/24/2009 **Required Date:** 09/07/2009

Start Qty: 1.00 **Required Qty:** 1.00

Component Item ID/ Item Name	Replacement Item ID	Mfg/ Purch	Bin Item	Primary Location	Last Location	Route Seq ID	Unit of Measure	Qty on Hand	Remaining Qty To Pick	Qty Issued	Date Issued	Status
ALS4-1032-225		Purchased	No			260	Each	8,834.000	1.0000			
Insert												
				Warehouse Location		**Loc Qty**		**Loc Code**				
				Main Warehouse								
				ST		8834						
				107441		16						
				110768		8818				X1	mo 09/09/22	
AN3C4A		Purchased	No			260	Each	842.0000	31.0000			
BOLT												
				Warehouse Location		**Loc Qty**		**Loc Code**		X12	mo 09/09/22	
				Main Warehouse	112720 112612					X19	mo 09/09/22	
				ST		842						
				112082		40						
				112314		802						
AN3C5A		Purchased	No			260	Each	550.0000	2.0000			
Bolt												
				Warehouse Location		**Loc Qty**		**Loc Code**				
				Main Warehouse								
				ST		550						
				111424		8						
				111707		342				X2	mo 09/09/22	
				112314		200						

Dart Aerospace Ltd

W/O:		WORK ORDER CHANGES					
DATE	STEP	PROCEDURE CHANGE	By	Date	Qty	Approval Chief Eng / Prod Mgr	Approval QC Inspector

Part No: _____ PAR #: _____ Fault Category: _____ NCR: Yes No DQA: _____ Date: _____

Resolution: _____ Disposition: _____ QA: N/C Closed: _____ Date: _____

NCR:		WORK ORDER NON-CONFORMANCE (NCR)						
DATE	STEP	Description of NC Section A	Corrective Action Section B			Verification Section C	Approval Chief Eng	Approval QC Inspector
			Initial Chief Eng	Action Description Chief Eng	Sign & Date			

NOTE: Date & initial all entries

H:\fFORMS\Quality Assurance\approved QA\NCRWO RevE

Picklist Print

August 20, 2009 3:20:29 PM

Work Order ID: 51383

Parent Item: D135-751-011RevC

Parent Item Name: Skidtube Installation

Comments:

Start Date: 08/24/2009 **Required Date:** 09/07/2009

Start Qty: 1.00 **Required Qty:** 1.00

Component Item ID/ Item Name	Replacement Item ID	Mfg/ Purch	Bin Item	Primary Location	Last Location	Route Seq ID	Unit of Measure	Qty on Hand	Remaining Qty To Pick	Qty Issued	Date Issued	Status
AN526C1032R10		Purchased	No			260	Each	594.0000	2.0000			
Screw												

Warehouse Location	Loc Qty	Loc Code		
Main Warehouse				
ST	594			
108062	135		X2	MD 09/09/22
108167	35			
110049	424			

AN960C10L		Purchased	No			260	Each	3,352.000	33.0000			
washer												

Warehouse Location	Loc Qty	Loc Code		
OFFSHORE				
FG	100			
103585	100			
Main Warehouse				
ST	3252			
112116	3252		X33	MD 09/09/22

Dart Aerospace Ltd

W/O:		WORK ORDER CHANGES					
DATE	STEP	PROCEDURE CHANGE	By	Date	Qty	Approval Chief Eng / Prod Mgr	Approval QC Inspector

Part No: _____ PAR #: _____ Fault Category: _____ NCR: Yes No DQA: _____ Date: _____

Resolution: _____ Disposition: _____ QA: N/C Closed: _____ Date: _____

NCR:		WORK ORDER NON-CONFORMANCE (NCR)						
DATE	STEP	Description of NC Section A	Corrective Action Section B			Verification Section C	Approval Chief Eng	Approval QC Inspector
			Initial Chief Eng	Action Description Chief Eng	Sign & Date			

NOTE: Date & initial all entries

H:\fFORMS\Quality Assurance\approved QA\NCRWO RevE

Picklist Print

August 20, 2009 3:20:29 PM

Work Order ID: 51383

Parent Item: D135-751-011RevC

Parent Item Name: Skidtube Installation

Comments:

Start Date: 08/24/2009 **Required Date:** 09/07/2009

Start Qty: 1.00 **Required Qty:** 1.00

Component Item ID/ Item Name	Replacement Item ID	Mfg/ Purch	Bin Item	Primary Location	Last Location	Route Seq ID	Unit of Measure	Qty on Hand	Remaining Qty To Pick	Qty Issued	Date Issued	Status
D2965-3RevB		Manufactured	No			260	Each	6.0000	1.0000			
Cap												

Warehouse Location	Loc Qty	Loc Code		
Main Warehouse 46582 ✓			X1	MD 09/09/22
ST	6			
50560	6			

Component Item ID/ Item Name	Replacement Item ID	Mfg/ Purch	Bin Item	Primary Location	Last Location	Route Seq ID	Unit of Measure	Qty on Hand	Remaining Qty To Pick	Qty Issued	Date Issued	Status
D2965RevB		Manufactured	No			260	Each	17.0000	1.0000			
Cap, 105 Skidtube												

Warehouse Location	Loc Qty	Loc Code		
Main Warehouse				
FP4	7			
50609	2			
50924 —	5		X1	MD 09/09/22
Main Warehouse				
ST	10			
43288	6			
46800	5			
50924	-1			

Dart Aerospace Ltd

W/O:		WORK ORDER CHANGES					
DATE	STEP	PROCEDURE CHANGE	By	Date	Qty	Approval Chief Eng / Prod Mgr	Approval QC Inspector

Part No: _____ **PAR #:** _____ **Fault Category:** _____ **NCR:** Yes No **DQA:** _____ **Date:** _____

Resolution: _____ **Disposition:** _____ **QA: N/C Closed:** _____ **Date:** _____

NCR:		WORK ORDER NON-CONFORMANCE (NCR)						
DATE	STEP	Description of NC Section A	Corrective Action Section B			Verification Section C	Approval Chief Eng	Approval QC Inspector
			Initial Chief Eng	Action Description Chief Eng	Sign & Date			

NOTE: Date & initial all entries

H:\fFORMS\Quality Assurance\approved QA\NCRWO RevE

Picklist Print

August 20, 2009 3:20:29 PM

Work Order ID: 51383

Parent Item: D135-751-011RevC

Parent Item Name: Skidtube Installation

Comments:

Start Date: 08/24/2009 **Required Date:** 09/07/2009

Start Qty: 1.00 **Required Qty:** 1.00

Component Item ID/ Item Name	Replacement Item ID	Mfg/ Purch	Bin Item	Primary Location	Last Location	Route Seq ID	Unit of Measure	Qty on Hand	Remaining Qty To Pick	Qty Issued	Date Issued	Status
D3492-041RevC		Manufactured	No			260	Each	3.0000	4.0000			
Plug Assembly												

Warehouse Location	Loc Qty	Loc Code
Main Warehouse 51584		
ST	3	
43816	3	

x4 MD 09/09/22

D3492-043RevC		Manufactured	No			260	Each	0.0000	4.0000			
Plug Assembly					51642					x4	MD 09/09/22	
D3492-047RevC		Manufactured	No			260	Each	56.0000	2.0000			
Plug Assembly												

Warehouse Location	Loc Qty	Loc Code
Main Warehouse		
ST	56	
27776	1	
28961	39	
39722	16	

x2 MD 09/09/22

D3508-1RevC		Manufactured	No			260	Each	0.0000	1.0000			
Wearplate					51261					x1	MD 09/09/22	

Dart Aerospace Ltd

W/O:		WORK ORDER CHANGES					
DATE	STEP	PROCEDURE CHANGE	By	Date	Qty	Approval Chief Eng / Prod Mgr	Approval QC Inspector

Part No: _____ **PAR #:** _____ **Fault Category:** _____ **NCR:** Yes No **DQA:** _____ **Date:** _____

Resolution: _____ **Disposition:** _____ **QA: N/C Closed:** _____ **Date:** _____

NCR:		WORK ORDER NON-CONFORMANCE (NCR)						
DATE	STEP	Description of NC Section A	Corrective Action Section B			Verification Section C	Approval Chief Eng	Approval QC Inspector
			Initial Chief Eng	Action Description Chief Eng	Sign & Date			

NOTE: Date & initial all entries

H:\fFORMS\Quality Assurance\approved QA\NCRWO RevE

Picklist Print

August 20, 2009 3:20:29 PM

Work Order ID: 51383

Parent Item: D135-751-011RevC

Parent Item Name: Skidtube Installation

Comments:

Start Date: 08/24/2009 **Required Date:** 09/07/2009

Start Qty: 1.00 **Required Qty:** 1.00

Component Item ID/ Item Name	Replacement Item ID	Mfg/ Purch	Bin Item	Primary Location	Last Location	Route Seq ID	Unit of Measure	Qty on Hand	Remaining Qty To Pick	Qty Issued	Date Issued	Status
D3508-3RevC		Manufactured	No			260	Each	1.0000	1.0000			
Wearplate												
				Warehouse Location		**Loc Qty**		**Loc Code**				
				Main Warehouse 51386						X1	mo 09/09/22	
				ST			1					
				46881			1					
D3508-5RevC		Manufactured	No			260	Each	0.0000	1.0000			
Wearplate				51388						X1	mo 09/09/22	
D3508-7RevC		Manufactured	No			260	Each	3.0000	1.0000			
Wearplate												
				Warehouse Location		**Loc Qty**		**Loc Code**				
				Main Warehouse 51389						X1	mo 09/09/22	
				ST			3					
				44518			3					
D3558-1RevB		Manufactured	No			260	Each	23.0000	1.0000			
Gasket												
				Warehouse Location		**Loc Qty**		**Loc Code**				
				Main Warehouse								
				ST			23					
				50925			23			X1	mo 09/09/22	

Dart Aerospace Ltd

W/O:		WORK ORDER CHANGES					
DATE	STEP	PROCEDURE CHANGE	By	Date	Qty	Approval Chief Eng / Prod Mgr	Approval QC Inspector

Part No: _____ **PAR #:** _____ **Fault Category:** _____ **NCR:** Yes No **DQA:** _____ **Date:** _____

Resolution: _____ **Disposition:** _____ **QA: N/C Closed:** _____ **Date:** _____

NCR:		WORK ORDER NON-CONFORMANCE (NCR)						
DATE	STEP	Description of NC Section A	Corrective Action Section B			Verification Section C	Approval Chief Eng	Approval QC Inspector
			Initial Chief Eng	Action Description Chief Eng	Sign & Date			

NOTE: Date & initial all entries

H:\fFORMS\Quality Assurance\approved QA\NCRWO RevE

Picklist Print

August 20, 2009 3:20:29 PM

Work Order ID: 51383

Parent Item: D135-751-011RevC

Parent Item Name: Skidtube Installation

Comments:

Start Date: 08/24/2009 **Required Date:** 09/07/2009

Start Qty: 1.00 **Required Qty:** 1.00

Component Item ID/ Item Name	Replacement Item ID	Mfg/ Purch	Bin Item	Primary Location	Last Location	Route Seq ID	Unit of Measure	Qty on Hand	Remaining Qty To Pick	Qty Issued	Date Issued	Status
D3558-3RevB Gasket		Manufactured	No			260	Each	6.0000	1.0000			
				Warehouse Location		**Loc Qty**		**Loc Code**				
				Main Warehouse								
				ST		6						
				45661		6				X1	mD	09/09/21
D3558-5RevB Gasket		Manufactured	No			260	Each	14.0000	1.0000			
				Warehouse Location		**Loc Qty**		**Loc Code**				
				Main Warehouse								
				ST		14						
				50926		14				X1	mD	09/09/21
D3558-7RevB Gasket		Manufactured	No			260	Each	21.0000	1.0000			
				Warehouse Location		**Loc Qty**		**Loc Code**				
				Main Warehouse								
				ST		21						
				36388		2						
				43245		5						
				50927		14				X1	mD	09/09/21

Dart Aerospace Ltd

W/O:		WORK ORDER CHANGES					
DATE	STEP	PROCEDURE CHANGE	By	Date	Qty	Approval Chief Eng / Prod Mgr	Approval QC Inspector

Part No: _____ **PAR #:** _____ **Fault Category:** _____ **NCR:** Yes No **DQA:** _____ **Date:** _____

Resolution: _____ **Disposition:** _____ **QA: N/C Closed:** _____ **Date:** _____

NCR:		WORK ORDER NON-CONFORMANCE (NCR)						
DATE	STEP	Description of NC Section A	Corrective Action Section B			Verification Section C	Approval Chief Eng	Approval QC Inspector
			Initial Chief Eng	Action Description Chief Eng	Sign & Date			

NOTE: Date & initial all entries

H:\fFORMS\Quality Assurance\approved QA\NCRWO RevE

Picklist Print

August 20, 2009 3:20:29 PM

Work Order ID: 51383

Parent Item: D135-751-011RevC

Parent Item Name: Skidtube Installation

Comments:

Start Date: 08/24/2009 **Required Date:** 09/07/2009

Start Qty: 1.00 **Required Qty:** 1.00

Component Item ID/ Item Name	Replacement Item ID	Mfg/ Purch	Bin Item	Primary Location	Last Location	Route Seq ID	Unit of Measure	Qty on Hand	Remaining Qty To Pick	Qty Issued	Date Issued	Status
NAS1611-007		Purchased	No			260	Each	447.0000	1.0000			
O-RING												
				Warehouse Location		**Loc Qty**		**Loc Code**				
				Main Warehouse								
				ST		447						
					103697	447				X2	MD 09/09/22	
NAS1611-010		Purchased	No			260	Each	345.0000	1.0000			
O-RING												
				Warehouse Location		**Loc Qty**		**Loc Code**				
				Main Warehouse								
				ST		345						
					110715	50				X4	MD 09/09/22	
					110915	295						
NAS1611-013		Purchased	No			260	Each	320.0000	1.0000			
O-RING												
				Warehouse Location		**Loc Qty**		**Loc Code**				
				Main Warehouse								
				ST		320						
				106513		11						
					111424	109				X4	MD 09/09/22	
					111758	200						

Dart Aerospace Ltd

W/O:		WORK ORDER CHANGES					
DATE	STEP	PROCEDURE CHANGE	By	Date	Qty	Approval Chief Eng / Prod Mgr	Approval QC Inspector

Part No: _____ PAR #: _____ Fault Category: _____ NCR: Yes No DQA: _____ Date: _____

Resolution: _____ Disposition: _____ QA: N/C Closed: _____ Date: _____

NCR:		WORK ORDER NON-CONFORMANCE (NCR)						
DATE	STEP	Description of NC Section A	Corrective Action Section B			Verification Section C	Approval Chief Eng	Approval QC Inspector
			Initial Chief Eng	Action Description Chief Eng	Sign & Date			

NOTE: Date & initial all entries

H:\fFORMS\Quality Assurance\approved QA\NCRWO RevE

Picklist Print

August 20, 2009 3:20:29 PM

Work Order ID: 51383

Parent Item: D135-751-011RevC

Parent Item Name: Skidtube Installation

Comments:

Start Date: 08/24/2009 **Required Date:** 09/07/2009

Start Qty: 1.00 **Required Qty:** 1.00

Component Item ID/ Item Name	Replacement Item ID	Mfg/ Purch	Bin Item	Primary Location	Last Location	Route Seq ID	Unit of Measure	Qty on Hand	Remaining Qty To Pick	Qty Issued	Date Issued	Status
AN3C4A BOLT		Purchased	No			280	Each	842.0000	8.0000			

Warehouse Location	Loc Qty	Loc Code
Main Warehouse		
ST	842	
112082	40	
112314	802	

112720 SP

Component Item ID/ Item Name	Replacement Item ID	Mfg/ Purch	Bin Item	Primary Location	Last Location	Route Seq ID	Unit of Measure	Qty on Hand	Remaining Qty To Pick	Qty Issued	Date Issued	Status
AN960C10L washer		Purchased	No			280	Each	3,352.000	8.0000			

9/9/25

Warehouse Location	Loc Qty	Loc Code
OFFSHORE		
FG	100	
103585	100	
Main Warehouse		
ST	3252	
112116	3252	

14

112116 SP

Dart Aerospace Ltd

W/O:		WORK ORDER CHANGES					
DATE	STEP	PROCEDURE CHANGE	By	Date	Qty	Approval Chief Eng / Prod Mgr	Approval QC Inspector

Part No: _____ **PAR #:** _____ **Fault Category:** _____ **NCR:** Yes No **DQA:** _____ **Date:** _____

Resolution: _____ **Disposition:** _____ **QA: N/C Closed:** _____ **Date:** _____

NCR:		WORK ORDER NON-CONFORMANCE (NCR)						
DATE	STEP	Description of NC Section A	Corrective Action Section B			Verification Section C	Approval Chief Eng	Approval QC Inspector
			Initial Chief Eng	Action Description Chief Eng	Sign & Date			

NOTE: Date & initial all entries

H:\fFORMS\Quality Assurance\approved QA\NCRWO RevE

Picklist Print

August 20, 2009 3:20:29 PM

Work Order ID: 51383

Parent Item: D135-751-011RevC

Parent Item Name: Skidtube Installation

Comments:

Start Date: 08/24/2009 **Required Date:** 09/07/2009

Start Qty: 1.00 **Required Qty:** 1.00

Component Item ID/ Item Name	Replacement Item ID	Mfg/ Purch	Bin Item	Primary Location	Last Location	Route Seq ID	Unit of Measure	Qty on Hand	Remaining Qty To Pick	Qty Issued	Date Issued	Status
D3506-1RevA Doubler		Manufactured	No			280	Each	7.0000	4.0000	B51789' (4)	BE 09/09/4	

Warehouse Location	Loc Qty	Loc Code	
Main Warehouse			
FG	3		
46538	3		
Main Warehouse			
ST	4		
50562	4		

Component Item ID/ Item Name	Replacement Item ID	Mfg/ Purch	Bin Item	Primary Location	Last Location	Route Seq ID	Unit of Measure	Qty on Hand	Remaining Qty To Pick	Qty Issued	Date Issued	Status
S D3512-1RevC Wearplate		Manufactured	No			280	Each	3.0000	2.0000	9/9/5		

Warehouse Location	Loc Qty	Loc Code	
Main Warehouse			
ST500	3		
51133	3		51133

Dart Aerospace Ltd

W/O:		WORK ORDER CHANGES					
DATE	STEP	PROCEDURE CHANGE	By	Date	Qty	Approval Chief Eng / Prod Mgr	Approval QC Inspector

Part No: _____ **PAR #:** _____ **Fault Category:** _____ **NCR:** Yes No **DQA:** _____ **Date:** _____

Resolution: _____ **Disposition:** _____ **QA: N/C Closed:** _____ **Date:** _____

NCR:		WORK ORDER NON-CONFORMANCE (NCR)						
DATE	STEP	Description of NC Section A	Corrective Action Section B			Verification Section C	Approval Chief Eng	Approval QC Inspector
			Initial Chief Eng	Action Description Chief Eng	Sign & Date			

NOTE: Date & initial all entries

H:\fFORMS\Quality Assurance\approved QA\NCRWO RevE

#51383 MF 09-08-20

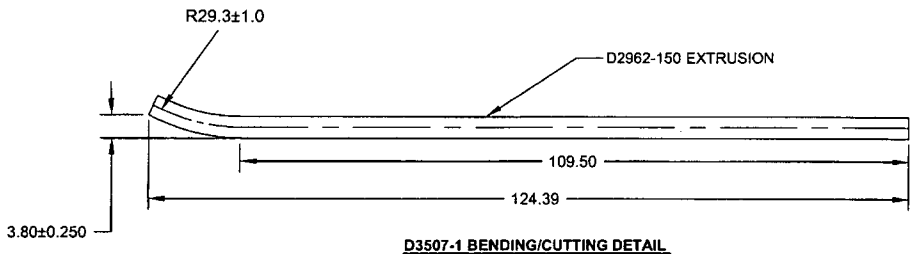

D3507-1 BENDING/CUTTING DETAIL

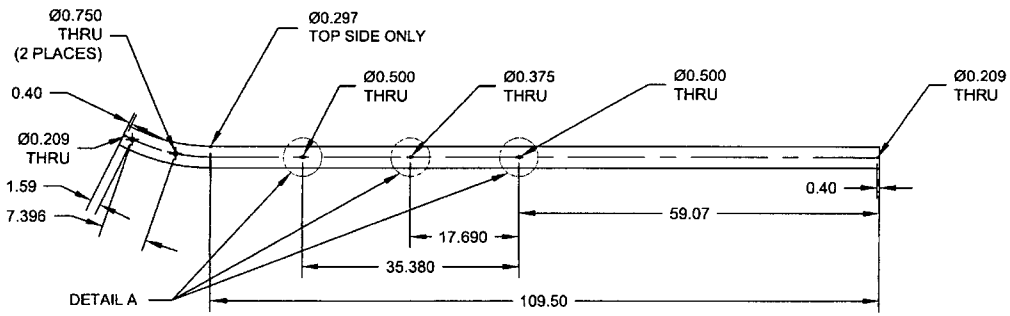

D3507-1 DRILLING DETAIL

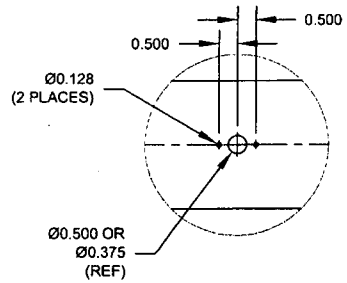

C

DETAIL A
(TYP, 6 PLACES)
SCALE 3:10

Qty	Part Number	Description	
X	D3507-041	SKIDTUBE ASSEMBLY	
1	D2962-150	EXTRUSION	
1	D2965	CAP	
1	D2965-3	CAP	B
4	D3492-041	PLUG ASSEMBLY	
4	D3492-043	PLUG ASSEMBLY	
2	D3492-047	PLUG ASSEMBLY	
2	D3504-1	CROSS BOLT SPACER	
1	D3504-3	CROSS BOLT SPACER	
2	D3504-5	CROSS BOLT SPACER	C
1	D3505-1	WEB	
4	D3506-1	DOUBLER	
2	D3506-3	DOUBLER	
1	D3508-1	WEARPLATE	
1	D3508-3	WEARPLATE	
1	D3508-5	WEARPLATE	
1	D3508-7	WEARPLATE	B
1	D3558-1	GASKET	B
1	D3558-3	GASKET	B
1	D3558-5	GASKET	B
1	D3558-7	GASKET	B
38	AELS-1032-130	INSERT	
1	AELS-1032-225	INSERT	
31	AN3C4A	BOLT	
2	AN3C5A	BOLT	B
2	AN526C1032-10	SCREW	C
33	AN960C10L	WASHER	C
12	MS20601AD4W3	RIVET	C

RELEASED 07.11.16

GENERAL NOTES:

1) FINISH:
   CHEMICAL CONVERSION COAT PER DART QSI 005 4.1 PRIOR TO INSERTING D3505-1 WEB. POWDER COAT ASSEMBLY GLOSS WHITE (REF 4.3.5.1) PER DART QSI 005 4.3. ANTI-SKID PAINT AS INDICATED TO 1.00 ABOVE CENTER LINE PER DART QSI 005 4.4
2) TOLERANCES: PER DART QSI 018 UNLESS OTHERWISE NOTED
3) DIMENSIONS: INCHES UNLESS OTHERWISE NOTED
4) WELDING TO BE DONE PER DART QSI 004
5) INSERT D3505-1 WEB TO LOCATION SHOWN OFF AFT END OF SKIDTUBE AND BOND WEB INTO OUTER TUBE WITH NON-STRUCTURAL SIKAFLEX-241/-291 ADHESIVE PER DART QSI 015 AFTER BENDING
6) USE DART DRILL TEMPLATE DT8868 TO LOCATE AND DRILL Ø0.297 HOLES (38 PLACES) FOR WEARSHOE INSERTS. INSTALL AELS-1032-130 PER SECTION C-C (38 PLACES) AFTER FINISH. SEAL WEARPLATE BOLTS WITH SIKAFLEX-241/-291.
7) DO NOT INSTALL AN3C4A BOLTS AND AN960C10L WASHERS IN INDICATED LOCATIONS

REV.	DESCRIPTION	BY	DATE
C	ADD D3504-5, FOR SKID GEAR DEFLECTOR; CHANGE FWD CAP BOLT TO AN526C1032-10 SCREW	DC	07.09.19
B	ADD GASKET, CHANGE HARDWARE MAT'L	PH	06.11.01
A	NEW ISSUE	PH	06.04.21

DESIGN	PH	DART AEROSPACE USA, INC PORT HADLOCK, WA	
DRAWN	JC		
CHECKED	PH	DRAWING NO.	REV. C
MFG. APPR.		D3507	SHEET 1 OF 2
APPROVED		TITLE	SCALE
DE APPR.		EC 135 SKIDTUBE	NTS
DATE	07.09.19		

COPYRIGHT © 2006 BY DART AEROSPACE USA, INC
THIS DOCUMENT IS PRIVATE AND CONFIDENTIAL AND IS SUPPLIED ON THE EXPRESS CONDITION THAT IT IS NOT TO BE USED FOR ANY PURPOSE OR COPIED OR COMMUNICATED TO ANY OTHER PERSON WITHOUT WRITTEN PERMISSION FROM DART AEROSPACE USA, INC

Dart Aerospace Ltd

W/O:		WORK ORDER CHANGES					
DATE	STEP	PROCEDURE CHANGE	By	Date	Qty	Approval Chief Eng / Prod Mgr	Approval QC Inspector

Part No: _____ PAR #: _____ Fault Category: _____ NCR: Yes No DQA: _____ Date: _____

Resolution: _____ Disposition: _____ QA: N/C Closed: _____ Date: _____

NCR:		WORK ORDER NON-CONFORMANCE (NCR)						
DATE	STEP	Description of NC Section A	Corrective Action Section B			Verification Section C	Approval Chief Eng	Approval QC Inspector
			Initial Chief Eng	Action Description Chief Eng	Sign & Date			

NOTE: Date & initial all entries

H:\fFORMS\Quality Assurance\approved QA\NCRWO RevE

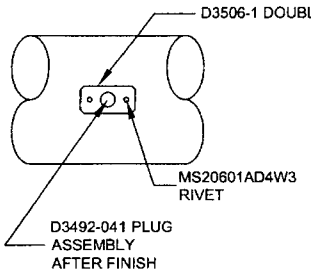

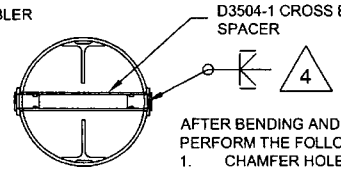

SECTION C-C
(SCALE 3:10)

AFTER BENDING AND DRILLING ASSEMBLY
PERFORM THE FOLLOWING FOR Ø0.500 HOLES ONLY:
1. CHAMFER HOLE 0.030 x 45°
2. INSERT D3504-1 CROSS BOLT SPACER (2 PLACES)
3. WELD INTO PLACE AND GRIND FLUSH
4. IF REQUIRED, PASS Ø0.404 ('Y' DRILL) THRU HOLE
5. INSTALL D3506-1 DOUBLER (4 PLACES) USING MS20601AD4W3 RIVET (8 PLACES)
6. AFTER FINISH, INSTALL D3492-041 PLUG ASSEMBLY (4 PLACES)

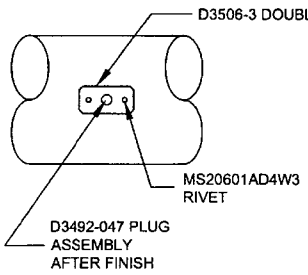

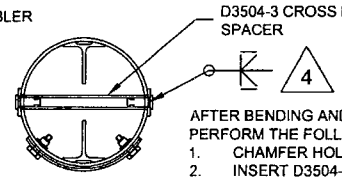

SECTION D-D
(SCALE 3:10)

AFTER BENDING AND DRILLING ASSEMBLY
PERFORM THE FOLLOWING FOR Ø0.375 HOLES ONLY:
1. CHAMFER HOLE 0.030 x 45°
2. INSERT D3504-3 CROSS BOLT SPACER (1 PLACES)
3. WELD INTO PLACE AND GRIND FLUSH
4. IF REQUIRED, PASS Ø0.277 ('J' DRILL) THRU HOLE
5. INSTALL D3506-3 DOUBLER (2 PLACES) USING MS20601AD4W3 RIVET (4 PLACES)
6. AFTER FINISH, INSTALL D3492-047 PLUG ASSEMBLY (2 PLACES)

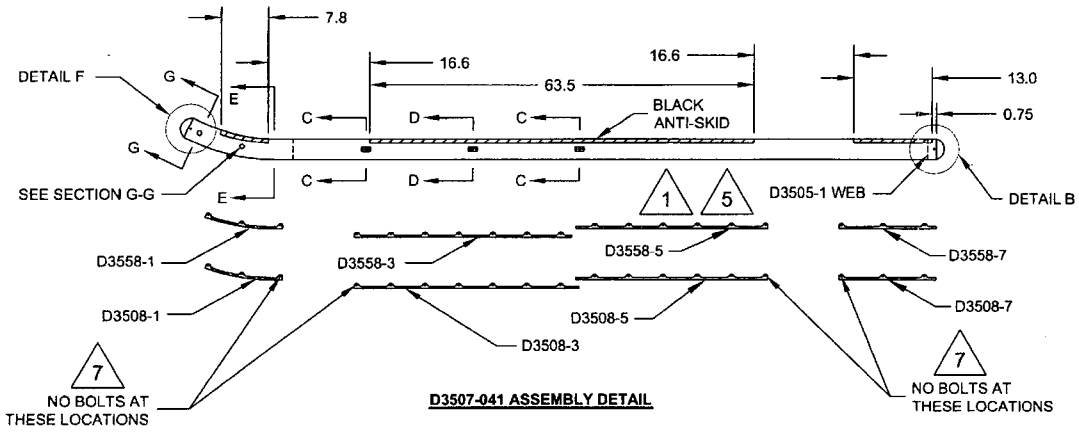

D3507-041 ASSEMBLY DETAIL

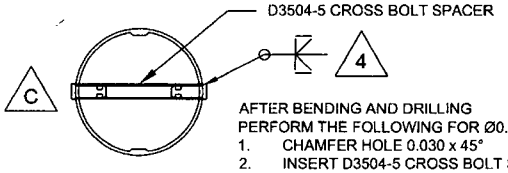

SECTION G-G
(SCALE 3:10)

AFTER BENDING AND DRILLING
PERFORM THE FOLLOWING FOR Ø0.750 HOLES ONLY:
1. CHAMFER HOLE 0.030 x 45°
2. INSERT D3504-5 CROSS BOLT SPACER (2 PLACES)
3. WELD INTO PLACE AND GRIND FLUSH
4. IF REQUIRED, PASS Ø0.594 (19/32 DRILL) THRU HOLE
5. AFTER FINISH, INSTALL D3492-043 PLUG ASSEMBLY (4 PLACES)

51383

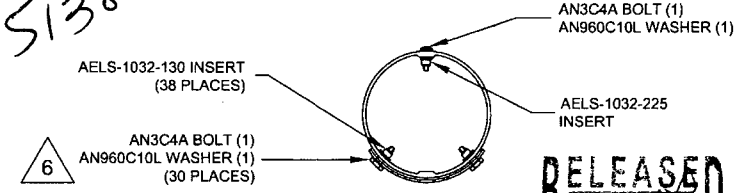

SECTION E-E
(SCALE 3:10)

RELEASED
07.11.18

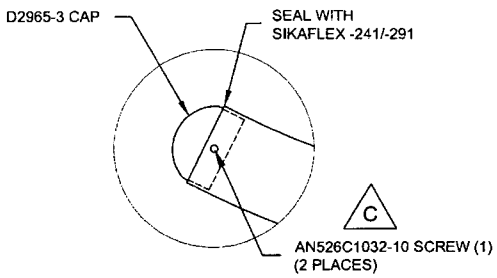

DETAIL F
(SCALE 1:5)

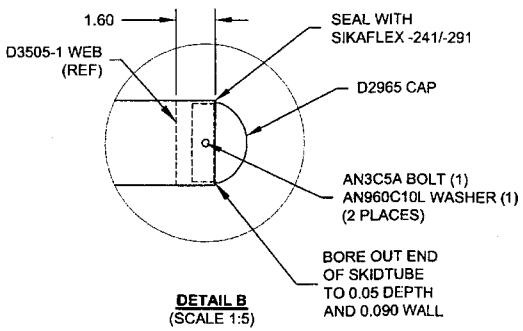

DETAIL B
(SCALE 1:5)

DESIGN		**DART AEROSPACE USA, INC** PORT HADLOCK, WA
DRAWN		
CHECKED		DRAWING NO. D3507 — REV. C — SHEET 2 OF 2
MFG. APPR.		
APPROVED		TITLE: EC 135 SKIDTUBE — SCALE 1:20
DE APPR.		
DATE 07.09.19		

COPYRIGHT © 2006 BY DART AEROSPACE USA, INC
THIS DOCUMENT IS PRIVATE AND CONFIDENTIAL AND IS SUPPLIED ON THE EXPRESS CONDITION THAT IT IS NOT TO BE USED FOR ANY PURPOSE OR COPIED OR COMMUNICATED TO ANY OTHER PERSON WITHOUT WRITTEN PERMISSION FROM DART AEROSPACE USA, INC.

Dart Aerospace Ltd

W/O:		WORK ORDER CHANGES					
DATE	STEP	PROCEDURE CHANGE	By	Date	Qty	Approval Chief Eng / Prod Mgr	Approval QC Inspector

Part No: _____ PAR #: _____ Fault Category: _____ NCR: Yes No DQA: _____ Date: _____

Resolution: _____ Disposition: _____ QA: N/C Closed: _____ Date: _____

NCR:		WORK ORDER NON-CONFORMANCE (NCR)						
DATE	STEP	Description of NC Section A	Corrective Action Section B			Verification Section C	Approval Chief Eng	Approval QC Inspector
			Initial Chief Eng	Action Description Chief Eng	Sign & Date			

NOTE: Date & initial all entries

H:\fFORMS\Quality Assurance\approved QA\NCRWO RevE

NO. 204

AWS D17.1.2001
QUALIFICATION TEST RECORD

Name: Barclay Elliott
Job number: 505370
Part number: D135 751 011
Description: Skid tube
Welding Process: Tig[✓] Mig[ ]
Base materiel: Aluminum
Current: AC[✓] DC[ ]

TEST REQUIREMENTS AND RESULTS

Visual:	pass[✓]	fail[ ]
Penetration:	pass[✓]	fail[ ]

UNACCEPTABLE

Cracks:	pass[✓]	fail[ ]
Undercut:	pass[✓]	fail[ ]
Pin holes:	pass[✓]	fail[ ]
Overlap (cold lap)	pass[✓]	fail[ ]
Porosity (surface):	pass[✓]	fail[ ]
Coloration:	pass[ ]	fail[ ]

Qualifier [signature] **Date of Test Coupon** 09-07-16

Welder [signature] **Date of Test Coupon** 09/07/16

The above named individual is qualified in accordance with AWS D17.1.2001 to weld